diabla

YONOH STUDIO

NEXO

MESA BAJA. COFFEE TABLE

PT33181



MATERIALES - MATERIALS

Aluminio termolacado. Sobre de la mesa disponible en porcelanico o fenólico.

Powder-coated aluminium. Tabletop is available in porcelain or phenolic plate.

DATOS TÉCNICOS - TECHNICAL DATA

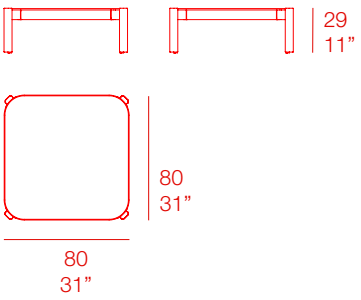

24 Kg / 52.8 Lbs **phenolic**
26 Kg / 57.2 Lbs **porcelain**
0,97 m3 / 34.26 ft3

diabla

MAINTENANCE - MANTENIMIENTO

Ver apartado de limpieza y mantenimiento: www.diablaoutdoor.com

See cleaning and maintenance section: en.diablaoutdoor.com

COLORES - COLOURS

Estructura. Frame



White 9016 | Pink 3015 | Red 3020 | Agate grey 7038 | Sand 1019 | Gold | Honey 1005 | Bronze 7006 | Leaf 6013 | Cement grey 7033 | Bottle green 6007



Cuprum | Wine red 3005 | Anthracite 7043 | Grey blue 5008 | Night blue | Black 9011

Fenólico. Phenolic

Núcleo negro. Black core



White | Pink | Red | Folkestone | Sand | Bronze | Burgundy | Anthracite | Black | Bruno marble

White core. Núcleo blanco



Full white | Albar marble

Porcelánico. Porcelain

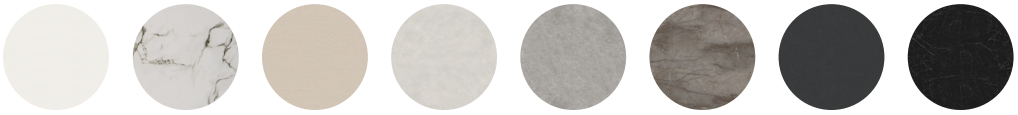

Zenith | Aura | Danae | Pearl | Argentum | Akmola | Charcoal grey | Black marble

Follow us

info@diablaoutdoor.com

www.diablaoutdoor.com

GANDIA BLASCO

Gandia Blasco **Group**